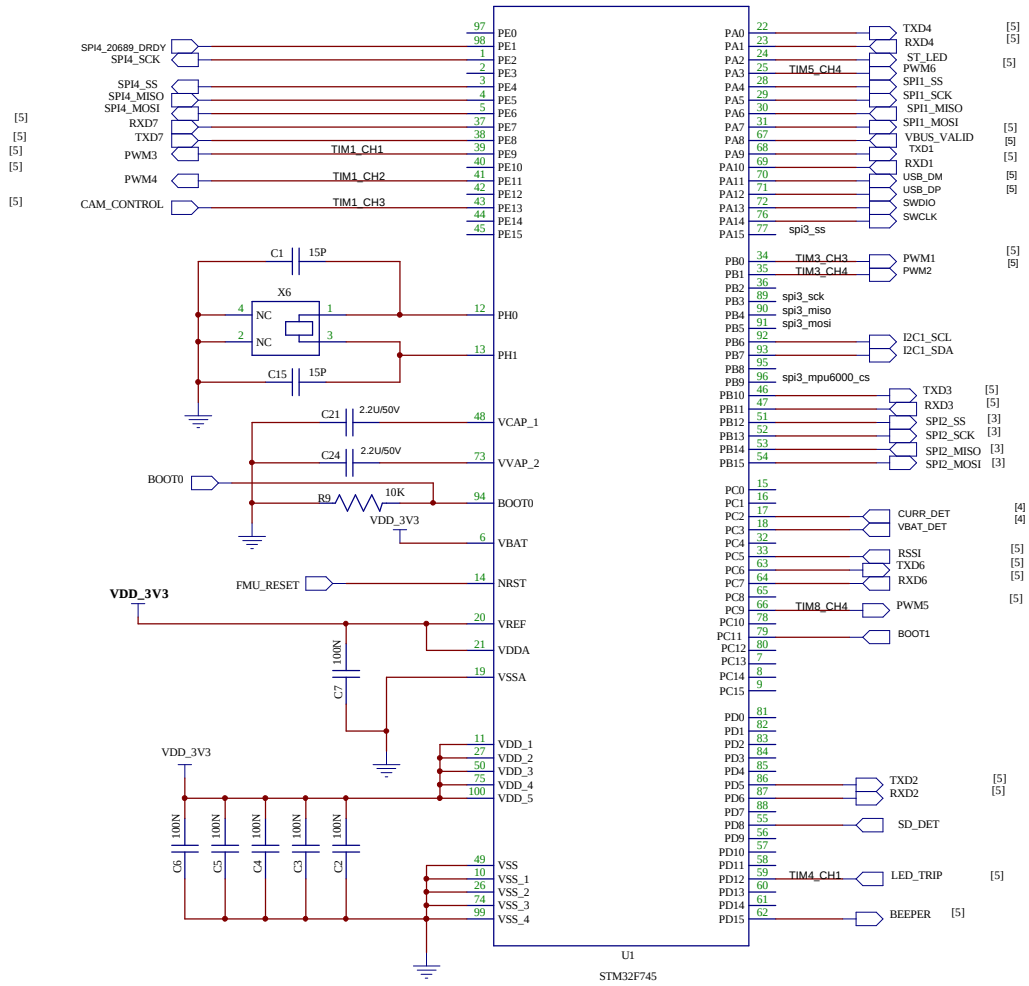

DMA1:

ST0--LED_TRIP
ST1--PWM6
ST2--PWM2
ST3--SPI2_RX
ST4--SPI2_TX
ST5--I2C1_RX
ST6--I2C1_TX
ST7--PWM1

DMA2:

ST0--SPI1_RX
ST1--
ST2--PWM3
ST3--PWM4
ST4--ADC1
ST5--SPI1_TX
ST6--CAM_CONTROL
ST7--PWM5

Title	STM32F745		KakuteF7
Size: A3	Version: 1.2	Revision: A	Drawn by Jamming
Date:	Time:	Sheet 2 of 5	
File:			Not for commercial use